Marking tape 25 mm



TECHNICAL SPECIFICATIONS

Overall width (B)	25 mm
Length	10000 mm
Thickness	0.19 mm
Material	PVC

DIMENSIONS

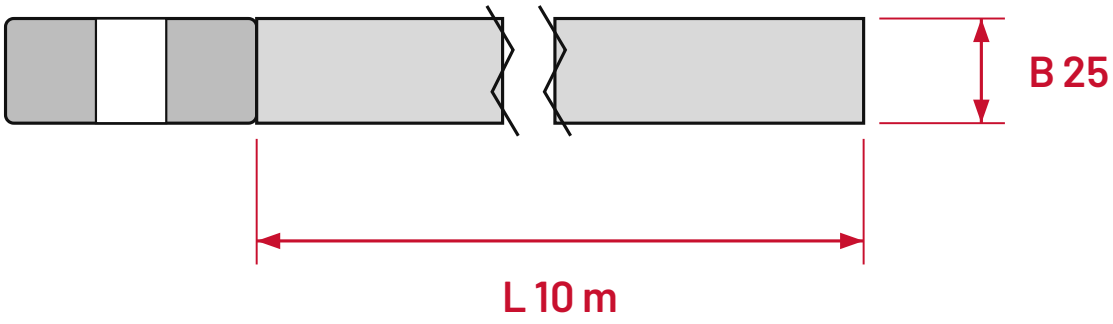

mm

B Overall width **L** Length
All dimensions in mm

AVAILABLE VERSIONS

Item no. · Weight

Width / Colour	Brown	Yellow	Red	Green	Blue	Orange	White	Red/White	Yellow/Black
25 mm	H6601G-25 mm	H6601Y-25 mm	H6601R-25mm	H6601V - 25mm	H6601B - 25mm	H6601O - 25 mm	H6601S - 25mm	H6601A-25mm	H6601D-25mm