Marking tape 50 mm



TECHNICAL SPECIFICATIONS

Overall width (B)	50 mm
Length	10000 mm
Thickness	0.19 mm
Material	PVC

DIMENSIONS

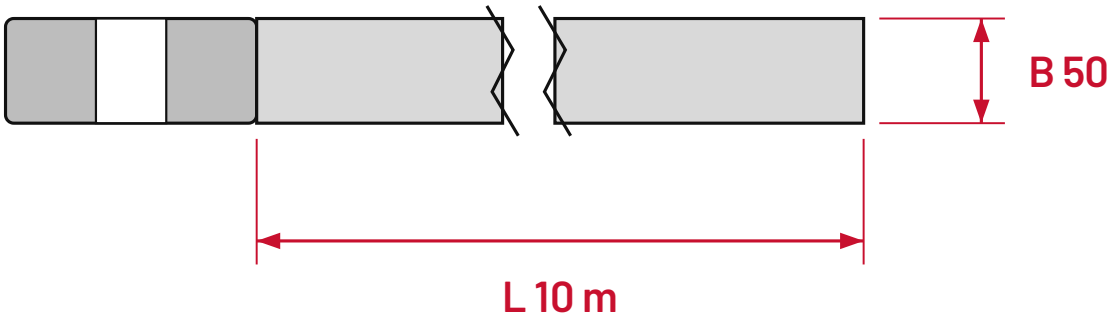

mm

B Overall width **L** Length
All dimensions in mm

AVAILABLE VERSIONS

Item no. · Weight

Width / Colour	Brown	Yellow	Red	Green	Blue	Orange	White	Red/White	Yellow/Black
50 mm	H6601G - 50mm	H6601Y-50 mm	H6601R-50mm	H6601V - 50mm	H6601B - 50mm	H6601O - 50 mm	H6601S - 50mm	H6601A-50mm	H6601D-50mm