Marking tape 80 mm



TECHNICAL SPECIFICATIONS

Overall width (B)	80 mm
Length	250000 mm
Thickness	0.11 mm
Material	Polyethylene

DIMENSIONS

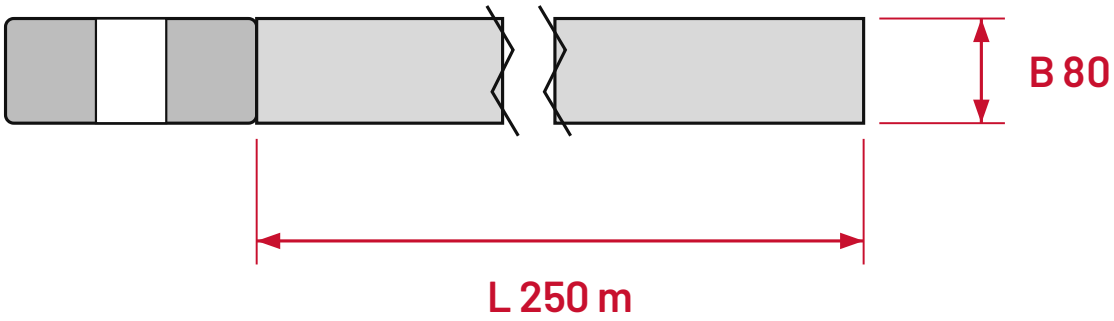

mm

B Overall width **L** Length
All dimensions in mm

AVAILABLE VERSIONS

Item no.	Colour	Colour
10033	Red/White chevron	–
10059	Black/Yellow chevron	–