Marking tape 80 mm



TECHNICAL SPECIFICATIONS

Overall width (B)	80 mm
Length	500000 mm
Thickness	0.03 mm
Material	Polyethylene (HDPE)

DIMENSIONS

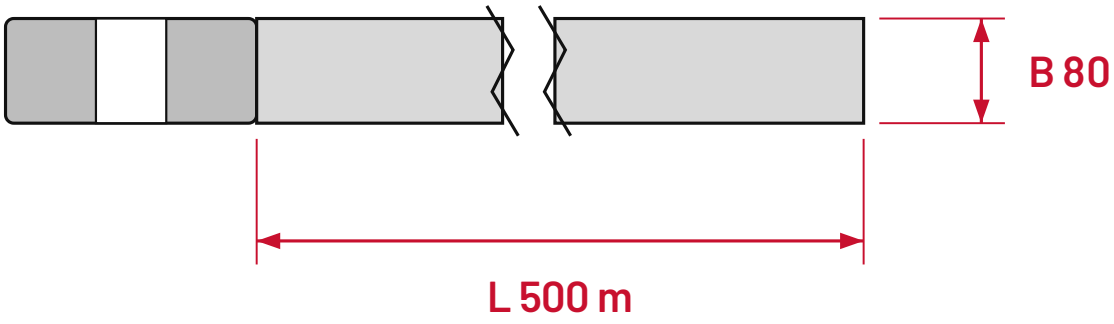

mm

B Overall width **L** Length
All dimensions in mm

AVAILABLE VERSIONS

Item no.	Colour	Colour
10047	Red/White stripes	–
100471	Red/White chevron	–
10048	Black/Yellow stripes	–
100481	Black/Yellow chevron	–
10065	White	White
10070	Yellow	Yellow